6720893355
(2019/06) db

Single Split R32 GR

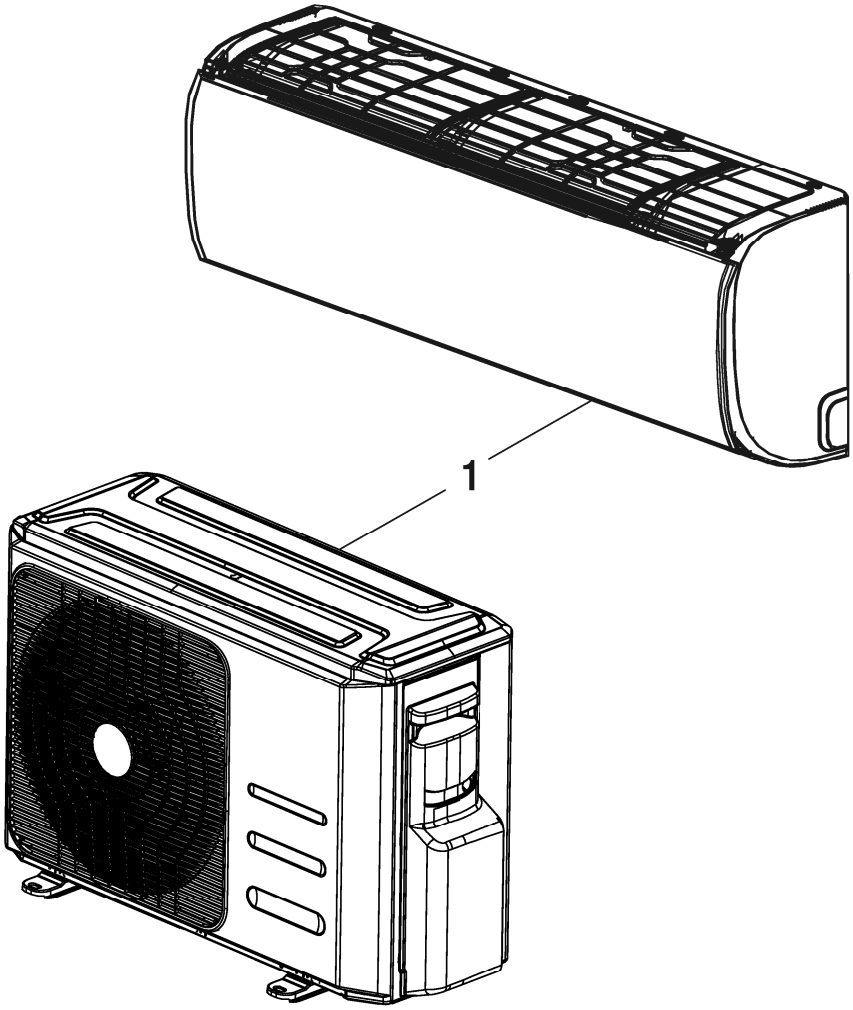

8738894234.aa.RO

[de] Wichtige Hinweise zur Installation/Montage

Die Installation/Montage muss durch eine für die Arbeiten zugelassene Fachkraft unter Beachtung der geltenden Vorschriften erfolgen.

[en] Important notes on installation/assembly

The installation/assembly must be carried out by a professional who is authorised to do the work, and with due regard to the relevant regulations.

[fr] Instructions importantes pour l'installation/le montage

L'installation/le montage doit être effectué(e) par un spécialiste qualifié pour les opérations concernées et dans le respect des prescriptions applicables.

[bg] Важни указания във връзка с инсталацията/монтажа

Инсталацията/монтажът трябва да се извършва от лицензиран за работите специалист в съответствие с приложимите разпоредби.

[cs] Důležité pokyny k instalaci/montáži

Instalaci/montáž musí při dodržení platných předpisů provést odborný pracovník s příslušným oprávněním pro tyto práce.

[da] Vigtige anvisninger til installationen/monteringen

Installationen/monteringen skal foretages af en godkendt installatør under overholdelse af de gældende forskrifter.

[el] Σημαντικές υποδείξεις για την εγκατάσταση/συναρμολόγηση

Η εγκατάσταση/συναρμολόγηση πρέπει να πραγματοποιείται από εξουσιοδοτημένο για τις εργασίες αυτές τεχνικό προσωπικό, το οποίο θα πρέπει να φροντίζει ώστε να τηρούνται οι ισχύουσες διατάξεις.

[es] Indicaciones importantes para instalación/montaje

La instalación/el montaje lo debe realizar personal especializado autorizado para los trabajos, respetando las prescripciones vigentes.

[et] Olulised juhised paigaldamiseks/montaažiks

Paigaldamist/montaaži tohib läbi viia selleks volitusi omav spetsialist, arvestades kehtivaid nõudeid.

[fl] Belangrijke aanwijzingen betreffende de installatie/montage

De installatie/montage moet worden uitgevoerd door een voor de werkzaamheden geautoriseerde installateur. Hij moet rekening houden met de geldende voorschriften.

[fi] Tärkeitä asennus- ja kokoonpano-ohjeita

Näihin töihin hyväksytyn ammattiasentajan pitää suorittaa asennus- ja kokoonpanotyöt voimassa olevien määräysten mukaisesti.

[hu] Fontos tudnivalók az installáláshoz/szereléshez

Az installálást/szerelést egy, a munkákra felhatalmazott szakembernek kell végeznie, az érvényes előírások figyelembevételével.

[it] Avvertenze importanti per l'installazione/il montaggio

L'installazione/il montaggio deve aver luogo ad opera di una ditta specializzata ed autorizzata in osservanza delle disposizioni vigenti.

[he] მნიშვნელოვანი მითითებები ინსტალაციისთვის/მონტაჟისათვის

ინსტალაცია/მონტაჟი უნდა განხორციელდეს სამუშაოებისთვის დაშვებული კვალიფიციური პერსონალის მიერ, მოქმედი განაწესის დაცვით.

[lt] Svarbios instaliavimo ir (arba) montavimo nuorodos

Instaliuoti ir montuoti, laikantis galiojančių taisyklių, leidžiama kvalifikuotiems specialistams, kurie buvo įgalioti šiems darbams atlikti.

[lv] Svarīgi norādījumi par iekārtas uzstādīšanu / montāžu

Iekārtas uzstādīšanu/montāžu ir jāveic specializētam sertificētam speciālistam, ievērojot spēkā esošos noteikumus.

[nl] Belangrijke aanwijzingen betreffende de installatie/montage

De installatie/montage moet worden uitgevoerd door een voor de werkzaamheden geautoriseerde installateur rekening houdend met de geldende voorschriften.

[no] Viktig informasjon om installasjon/montering

Installasjonen/monteringen skal gjennomføres av autoriserte installatører, og gjeldende forskrifter skal følges.

[pl] Ważne wskazówki dotyczące instalacji/montażu

Instalacja /montaż muszą być wykonane przez uprawnionego do tego rodzaju prac specjalistę przy zachowaniu obowiązujących przepisów.

[pt] Indicações importantes relativas à instalação/montagem

A instalação/montagem deve ser efetuada por um técnico especializado com qualificações para estes trabalhos, tendo em atenção os regulamentos em vigor.

[ro] Indicaţii importante privind instalarea/montajul

Instalarea/montajul trebuie realizate de către un specialist autorizat pentru lucrările respective, respectându-se prescripţiile valabile.

[ru] Важные указания по подключению/монтажу

Подключение/монтаж должны выполнять специалисты, имеющие допуск к выполнению таких работ, при соблюдении действующих норм и правил.

[sk] Dôležité pokyny týkajúce sa inštalácie/montáže

Inštaláciu/montáž musí realizovať odborník s oprávnením na výkon týchto prác, pričom musí dodržovať platné predpisy.

[sl] Pomembni napotki za namestitev/montažo

Namestitev/montažo mora izvesti strokovnjak, pristojen za tovrstna dela, ob upošte vanju veljavnih predpisov.

[sr] Važna uputstva za ugradnju i montažu

Ugradnju i montažu moraju da obave samo stručna lica ovlašćena za izvođenje takvih radova koja će poštovati važeće propise.

[sv] Viktiga anvisningar för installation/montering

Installationen/monteringen måste utföras av en behörig och fackkunnig person enligt gällande föreskrifter.

[tr] Kurulum/Montaj ile ilgili önemli uyarılar

Kurulum/Montaj çalışmaları sadece yetkili bayiler tarafından aşağıda belirtilen talimatlar dikkate alınarak yapılmalıdır.

[uk] Важливі вказівки щодо установки/монтажу

Установку/монтаж мають здійснювати фахівці, що мають дозвіл на проведення цих робіт, із дотримання чинних приписів.

[zh] 安装方面的重要提示

必须由受到许可承担该项工作的专业人员遵照相关法规进行安装。

[ar] ملاحظات هامة للتركيب/التجميع

يجب أن يتم التركيب/التجميع من قبل متخصص مصرح له بالعمل، مع مراعاة اللوائح السارية.

[fa] تذکرات مهم درباره نصب/مونتاژ

نصب/مونتاژ باید توسط فردی حرفه ای که مجاز به انجام این کار است، و همچنین با توجه کامل به مقررات مربوطه انجام شود.

Table of contents

RAC 2,6-2 IBW	7 733 700 106	6
RAC 3,5-2 IBW	7 733 700 107	6
RAC 5,3-2 IBW	7 733 700 108	6
RAC 2,6-2 OUE	8 733 500 849	10
RAC 2,6-3 IPW	7 739 838 030	12
RAC 3,5-3 IPW	7 739 838 032	12
RAC 2,6-3 OU	7 739 838 031	14
RAC 3,5-3 OU	7 739 838 033	14
RAC 3,5-2 OUE	8 733 500 850	16
RAC 5,3-2 OUE	8 733 500 851	18
RAC 5,3-3 IPW	7 739 838 034	20
RAC 5,3-3 OU	7 739 838 035	22
RAC 7-2 IBW	7 733 700 109	24
RAC 7-2 OUE	8 733 500 852	26
RAC 7-3 IPW	7 739 838 036	28
RAC 7-3 OU	7 739 838 037	30

Spare parts list

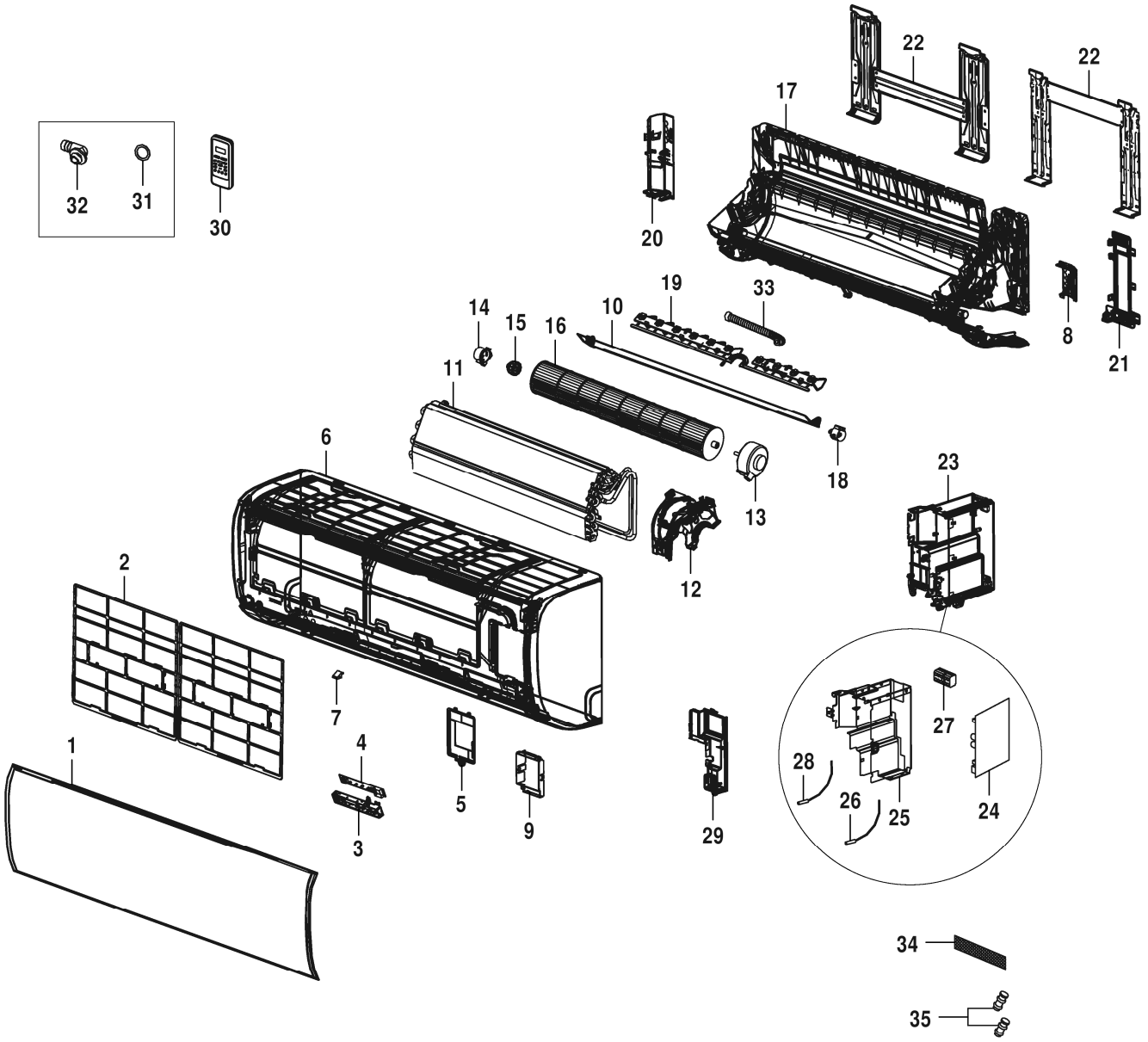

8738894117.aa.RO

RAC 2,6-2 IBW	7 733 700 106
RAC 3,5-2 IBW	7 733 700 107
RAC 5,3-2 IBW	7 733 700 108

Pos	Description	Ordering no.	RAC 2,6-2 IBW	RAC 3,5-2 IBW	RAC 5,3-2 IBW														Remarks
1	Panel assembly	8 750 500 697	■	■															
1	Panel assembly	8 750 500 698			■														
2	Air filter	7 739 834 952	■	■															
2	Air filter	7 739 834 953			■														
3	Display box assembly of Split Unit	7 739 834 997	■	■	■														
4	Display board assembly	7 739 834 995	■	■	■														
5	Cover of electrical equipment	7 739 834 981	■	■	■														
6	Panel frame assembly	7 739 835 107	■	■															
6	Panel frame assembly	7 739 835 108			■														
7	Screw cap	7 739 835 129	■	■	■														
8	Right cover of chassis	7 739 835 125	■	■															
8	Right cover of chassis	7 739 835 126			■														
9	Terminal cover assembly	7 739 835 145	■	■	■														
10	Horizontal louver assembly	7 739 835 049			■														
10	Wind Guide Assembly	7 739 835 165	■	■															
11	Evaporator Assembly	7 739 835 032	■	■															
11	Evaporator Assembly	8 733 500 709			■														
12	Fan motor cover	7 739 835 039	■	■															
12	Fan motor cover	7 739 835 040			■														
13	Asynchronous motor	7 739 832 401			■														
13	Single phase asynchronous motor	8 733 500 703	■	■															
14	Bearing holder	7 739 832 344	■	■	■														
15	Bearing base	7 739 832 345	■	■	■														
16	Cross-flow window rotor	7 739 832 504	■	■															
16	Cross flow fan	7 739 832 519			■														
17	Chassis assembly	7 739 834 968	■	■															
17	Chassis assembly	7 739 834 969			■														
18	Louver motor	7 739 832 349	■	■	■														
19	Vertical vane	7 739 835 157			■														
19	Horizontal louver	8 733 500 704	■	■															
20	Left cover of chassis	7 739 835 077	■	■															
20	Left cover of chassis	7 739 835 078			■														
21	Pipe clamp board	7 739 835 113	■	■															
21	Pipe clamp board	7 739 835 115			■														
22	Installation Plate	7 739 835 070	■	■															
22	Installation plate	7 739 835 071			■														
23	Electronic control box subassembly	8 733 500 705	■																
23	Electronic control box subassembly	8 733 500 707		■															
23	Electronic control box subassembly	8 733 500 710			■														
24	Main control board subassembly	8 733 500 706	■																
24	Main control board subassembly	8 733 500 708		■															
24	Main control board subassembly	8 733 500 711			■														
25	Electronic installing box	7 739 835 020	■	■	■														
26	Pipe temperature sensor assembly	7 739 832 357	■	■	■														
27	Wire joint	7 739 832 358	■	■	■														
28	Ambient temperature sensor assembly	7 739 832 408	■	■	■														
29	Cover of electronic control box	7 739 834 984	■	■	■														
30	Infrared Room Controller	7 733 700 120	■	■	■														
31	Seal ring	7 739 832 361	■	■	■														
32	Drain hose	7 739 832 362	■	■	■														
33	Drain hose	7 739 832 497	■	■	■														
34	Air freshening filter	7 739 832 363	■	■	■														

RAC 2,6-2 IBW	7 733 700 106
RAC 3,5-2 IBW	7 733 700 107
RAC 5,3-2 IBW	7 733 700 108

Spare parts list

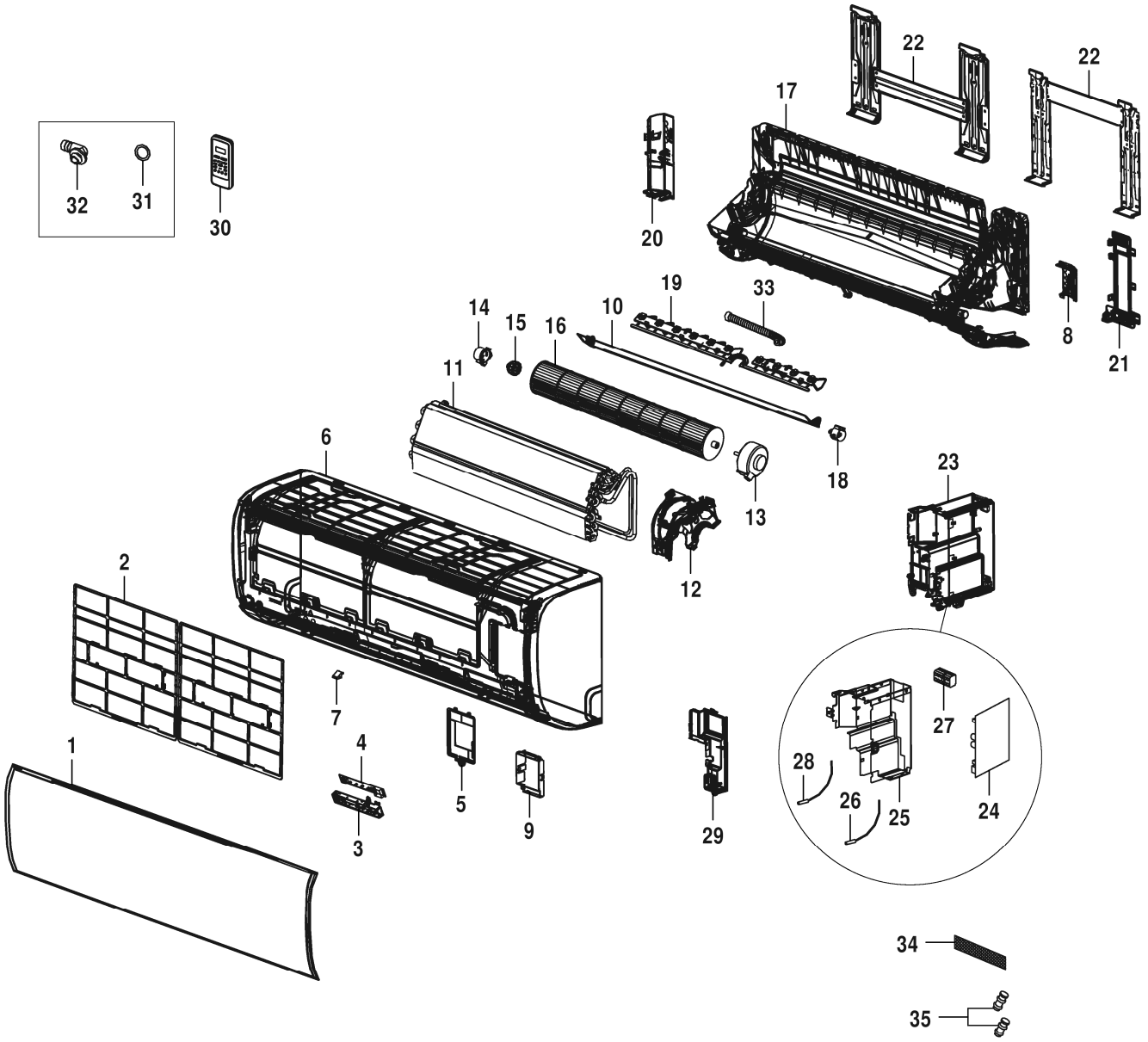

8738894117.aa.RO

RAC 2,6-2 IBW	7 733 700 106
RAC 3,5-2 IBW	7 733 700 107
RAC 5,3-2 IBW	7 733 700 108

Pos	Description	Ordering no.	RAC 2,6-2 IBW	RAC 3,5-2 IBW	RAC 5,3-2 IBW														Remarks
35	Pipe Nut TLM-B02 - 3/8’	7 739 832 338	■	■															
35	Pipe Nut TLM-A01 - 1/4’	7 739 832 339	■	■	■														
35	Pipe Nut TLM-C03 - 1/2’	7 739 832 398			■														

RAC 2,6-2 IBW	7 733 700 106
RAC 3,5-2 IBW	7 733 700 107
RAC 5,3-2 IBW	7 733 700 108

Spare parts list

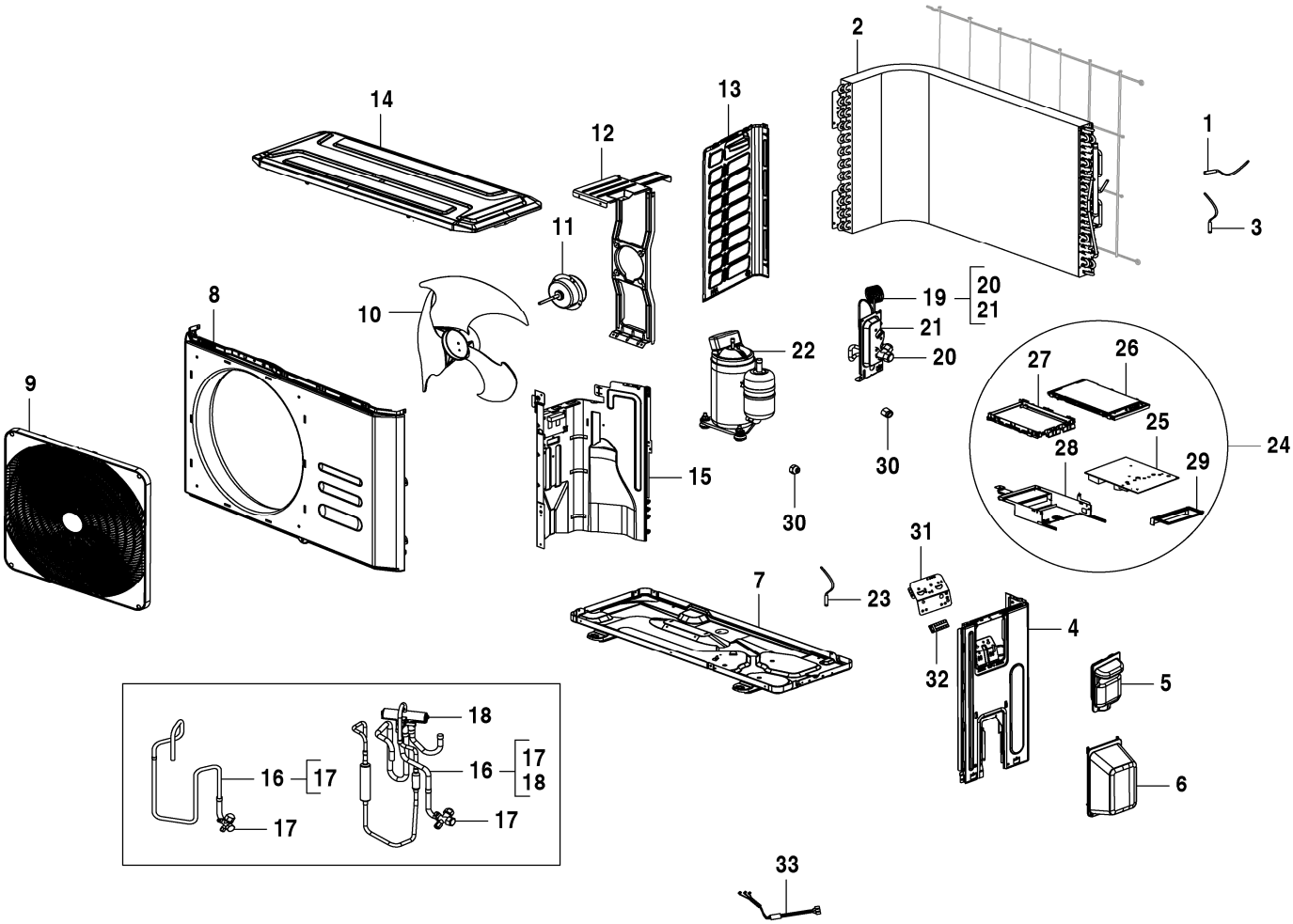

8738894965.aa.RO

RAC 2,6-2 OUE 8 733 500 849

Pos	Description	Ordering no.	RAC 2,6-2 OUE																Remarks
1	Room Temperature Sensor	7 739 838 131	■																
2	Condenser Assembly	8 733 500 670	■																
3	Pipe Temperature Sensor	7 739 838 132	■																
4	Right clapboard assembly	8 733 500 671	■																
5	Big handle	7 739 832 370	■																
6	Water collector	7 739 832 371	■																
7	Chassis assembly	8 733 500 672	■																
8	Front panel assembly	8 733 500 673	■																
9	Air outlet grille	8 733 500 674	■																
10	Axial flow fan	8 733 500 675	■																
11	Brushless DC Motor	8 733 500 676	■																
12	Supporter subassembly of fan motor	8 733 500 677	■																
13	Left supporter	8 733 500 678	■																
14	Top cover assembly	8 733 500 679	■																
15	Partition board	8 733 500 680	■																
16	4-way Valve Assembly	8 733 500 681	■																
17	Gas valve	8 733 500 682	■																
18	4-way valve	7 739 832 383	■																
19	Liquid valve assembly	8 733 500 683	■																
20	Liquid valve	7 739 832 386	■																
21	Valve plate	7 739 832 384	■																
22	DC Inverter Rotary Compressor	8 733 500 684	■																
23	Discharge temperature sensor assembly	7 739 832 388	■																
24	Electronic control box subassembly	8 733 500 685	■																
25	Outdoor main control board subassembly	8 733 500 686	■																
26	Cover of electronic control box	7 739 832 681	■																
27	Support of electronic control box	7 739 832 391	■																
28	Electronic installing box	7 739 832 392	■																
29	Fixing board	8 733 500 687	■																
30	Pipe Nut TLM-B02 - 3/8’	7 739 832 338	■																
30	Pipe Nut TLM-A01 - 1/4’	7 739 832 339	■																
31	Installation plate subassembly	8 733 500 688	■																
32	Wire joint	7 739 832 394	■																
33	Connection cable assembly of compressor	7 739 834 977	■																

RAC 2,6-2 OUE 8 733 500 849

Spare parts list

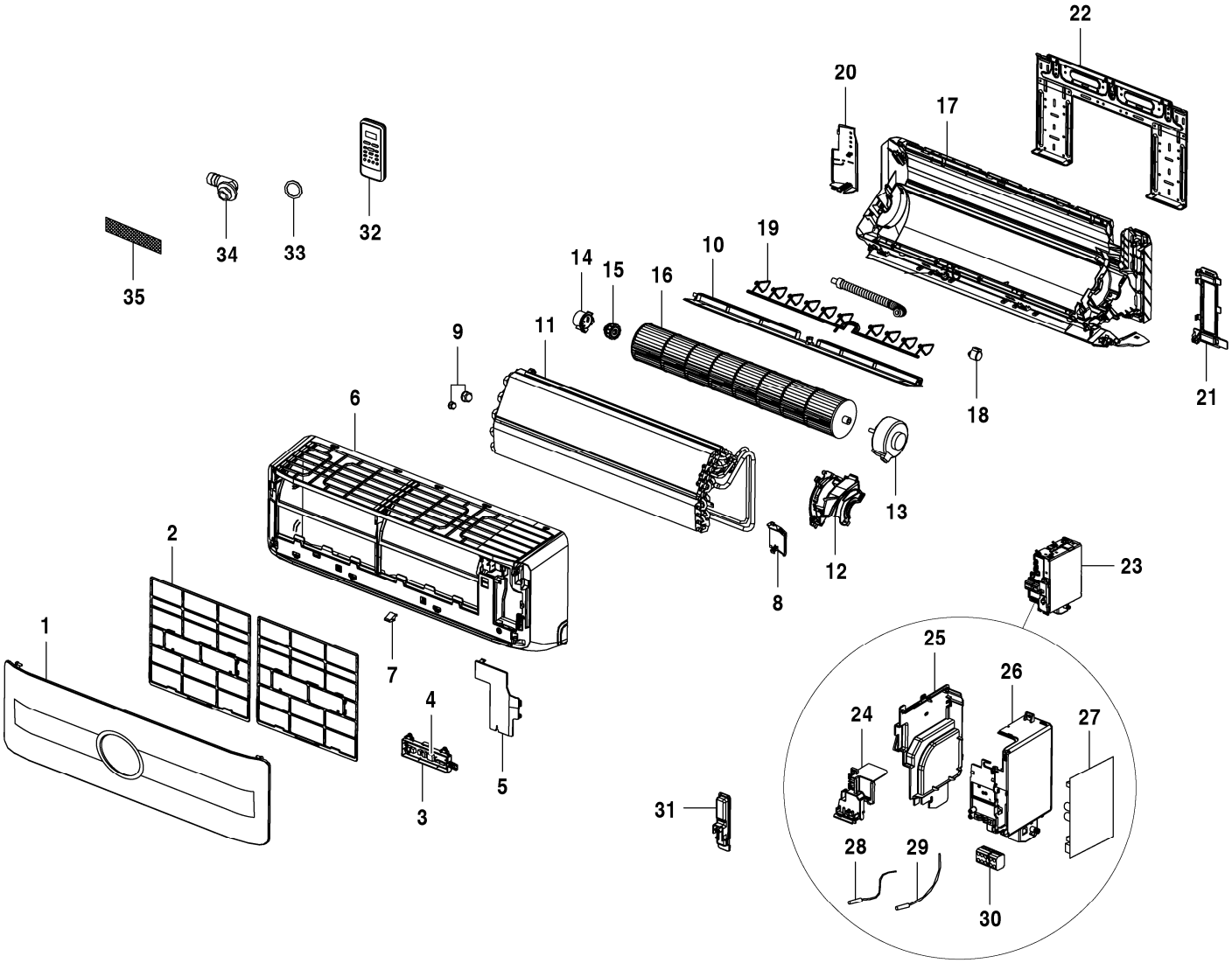

8738894141.ab.RO

RAC 2,6-3 IPW	7 739 838 030
RAC 3,5-3 IPW	7 739 838 032

Pos	Description	Ordering no.	RAC 2,6-3 IPW	RAC 3,5-3 IPW															Remarks
1	Panel assembly	8 750 500 702	■																
1	Panel assembly	8 750 500 703		■															
2	Filter	7 739 832 473	■																
2	Filter	7 739 832 499		■															
3	Display box subassembly	8 733 500 241	■	■															
4	Display board subassembly	7 733 700 135	■	■															
5	E-Parts Cover Plate	7 739 832 476	■	■															
6	Frame assembly	7 739 832 477	■																
6	Frame assembly	7 739 832 500		■															
7	Screw Cap	7 739 832 478	■																
7	Screw Cap	7 739 832 501		■															
8	Right Cover Plate of Chassis	7 739 832 479	■	■															
9	Pipe Nut TLM-B02 - 3/8’	7 739 832 338	■	■															
9	Pipe Nut TLM-A01 - 1/4’	7 739 832 339	■	■															
10	Wind Guide Assembly	7 739 832 480	■																
10	Wind Guide Assembly	7 739 832 502		■															
11	Evaporator assembly	7 733 700 136	■																
11	Evaporator assembly	7 739 832 503		■															
12	Motor Bearing Cover	7 739 832 482	■	■															
13	Asynchronous motor	7 739 832 343	■	■															
14	Bearing holder	7 739 832 344	■	■															
15	Bearing base	7 739 832 345	■	■															
16	Cross-flow window rotor	7 739 832 483	■																
16	Cross-flow window rotor	7 739 832 504		■															
17	Chassis Assembly	7 739 832 505		■															
17	Chassis assembly	8 733 500 244	■																
18	Louver motor	7 739 832 349	■	■															
19	Vertical vane subassembly	7 733 700 137	■																
19	Louver Assembly	7 739 832 506		■															
20	Left cover of chassis	7 739 832 486	■	■															
21	Pipe clamp board	7 739 832 487	■	■															
22	Installation plate	7 739 832 488	■	■															
23	Electronic control box subassembly	8 733 500 245	■																
23	Electronic control box subassembly	8 733 500 251		■															
24	Upper Cover Board of PCB	7 739 832 490	■	■															
25	Left Side Plate of PCB	7 739 832 491	■	■															
26	Right Side Plate of E-Parts Box	7 739 832 492	■	■															
27	Indoor main control board assembly	7 739 835 054	■																
27	Indoor main control board assembly	7 739 835 055		■															
28	Room Temperature Sensor	7 739 832 494	■	■															
29	Pipe temperature sensor assembly	7 739 832 357	■	■															
30	Wire joint	7 739 832 358	■	■															
31	Electrical Control Box Cover	7 739 832 495	■	■															
32	Infrared Room Controller	7 739 838 310	■	■															
33	Seal ring	7 739 832 361	■	■															
34	Drain hose	7 739 832 362	■	■															
35	Air freshening filter	7 739 832 363	■	■															
36	Drain hose	7 739 832 497	■	■															

RAC 2,6-3 IPW 7 739 838 030

RAC 3,5-3 IPW 7 739 838 032

Spare parts list

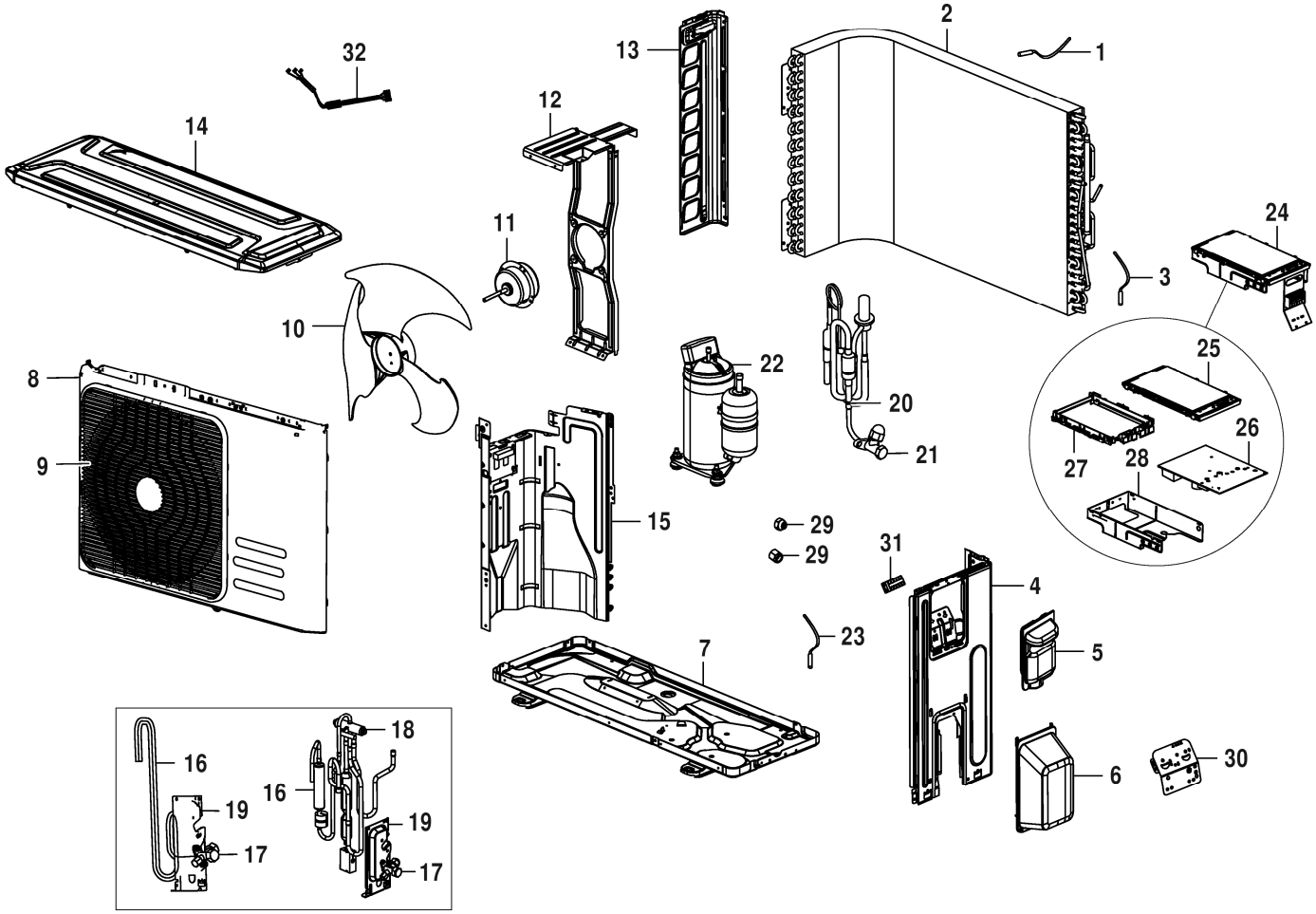

8738894114.aa.RO

RAC 2,6-3 OU	7 739 838 031
RAC 3,5-3 OU	7 739 838 033

Pos	Description	Ordering no.	RAC 2,6-3 OU	RAC 3,5-3 OU															Remarks
1	Room Temperature Sensor	7 739 835 127	■																
2	Condenser assembly	7 739 832 459	■	■															
3	Pipe temperature sensor assembly	7 739 832 368	■	■															
3	Pipe Temperature Sensor	7 739 838 132	■	■															FD >= 2019
4	Right clapboard assembly	7 739 832 460	■	■															
5	Big handle	7 739 832 370	■	■															
6	Water collector	7 739 832 371	■	■															
7	Chassis assembly	7 739 832 461	■	■															
8	Front panel	7 739 832 462	■	■															
8	Front panel assembly	7 739 838 133	■	■															FD >= 2019
9	Air outlet grille	7 739 832 374	■	■															
10	Axial flow fan	7 739 832 463	■	■															
11	Fan Motor	7 739 832 376	■	■															
11	Brushless DC Motor	7 739 838 134	■	■															FD >= 2019
12	Supporter assembly of fan motor	7 739 835 142	■	■															
13	Left supporter	7 739 832 465	■	■															
14	Top cover assembly	7 739 832 466	■	■															
15	Partition board assembly	7 739 832 467	■	■															
16	4-way valve assembly	7 739 832 468	■	■															
17	Gas valve	7 739 832 382	■	■															
18	4-way valve	7 739 832 383	■	■															
19	Valve plate	7 739 832 384	■	■															
20	Liquid valve assembly	7 739 835 082	■																
20	Liquid valve assembly	7 739 835 083		■															
21	Liquid valve	7 739 832 386	■	■															
22	Inverter Controlled Rotary Compressor	7 739 835 075	■	■															
23	Discharge temperature sensor assembly	7 739 832 388	■	■															
24	Electronic control box assembly	7 739 835 007	■																
24	Electronic control box assembly	7 739 835 009		■															
25	Cover of electronic control box	7 739 832 681	■	■															FD <2019
26	Outdoor main control board assembly	7 739 835 089	■																
26	Outdoor main control board assembly	7 739 835 091		■															
27	Support of electronic control box	7 739 832 391	■	■															FD <2019
28	Electronic installing box	7 739 832 392	■	■															
29	Pipe Nut TLM-B02 - 3/8’	7 739 832 338	■	■															
29	Pipe Nut TLM-A01 - 1/4’	7 739 832 339	■	■															
30	Terminal board	7 739 832 393	■	■															
31	Wire joint	7 739 832 394	■	■															
32	Connection cable assembly of compressor	7 739 834 977	■	■															

RAC 2,6-3 OU	7 739 838 031
RAC 3,5-3 OU	7 739 838 033

Spare parts list

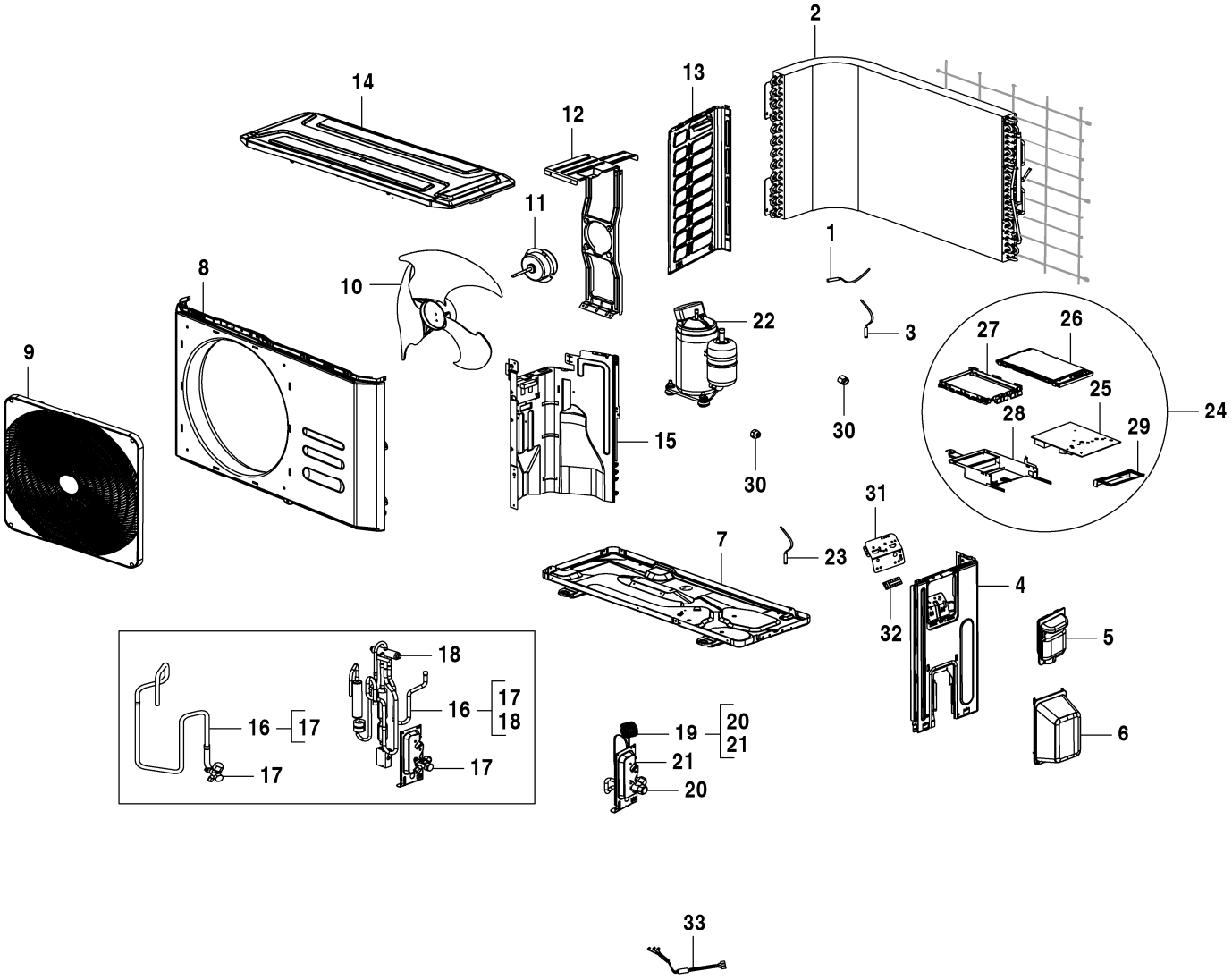

8738894966.aa.RO

RAC 3,5-2 OUE 8 733 500 850

Pos	Description	Ordering no.	RAC 3,5-2 OUE																Remarks
1	Room Temperature Sensor	7 739 838 131	■																
2	Condenser Assembly	8 733 500 670	■																
3	Pipe Temperature Sensor	7 739 838 132	■																
4	Right clapboard assembly	8 733 500 671	■																
5	Big handle	7 739 832 370	■																
6	Water collector	7 739 832 371	■																
7	Chassis assembly	8 733 500 672	■																
8	Front panel assembly	8 733 500 673	■																
9	Air outlet grille	8 733 500 674	■																
10	Axial flow fan	8 733 500 675	■																
11	Brushless DC Motor	8 733 500 676	■																
12	Supporter subassembly of fan motor	8 733 500 677	■																
13	Left supporter	8 733 500 678	■																
14	Top cover assembly	8 733 500 679	■																
15	Partition board	8 733 500 680	■																
16	4-way Valve Assembly	8 733 500 681	■																
17	Gas valve	8 733 500 682	■																
18	4-way valve	7 739 832 383	■																
19	Liquid valve assembly	8 733 500 683	■																
20	Liquid valve	7 739 832 386	■																
21	Valve plate	7 739 832 384	■																
22	DC Inverter Rotary Compressor	8 733 500 684	■																
23	Discharge temperature sensor assembly	7 739 832 388	■																
24	Electronic control box subassembly	8 733 500 689	■																
25	Outdoor main control board subassembly	8 733 500 690	■																
26	Cover of electronic control box	7 739 832 681	■																
27	Support of electronic control box	7 739 832 391	■																
28	Electronic installing box	7 739 832 392	■																
29	Fixing board	8 733 500 687	■																
30	Pipe Nut TLM-B02 - 3/8’	7 739 832 338	■																
30	Pipe Nut TLM-A01 - 1/4’	7 739 832 339	■																
31	Installation plate subassembly	8 733 500 688	■																
32	Wire joint	7 739 832 394	■																
33	Connection cable assembly of compressor	7 739 834 977	■																

RAC 3,5-2 OUE 8 733 500 850

Spare parts list

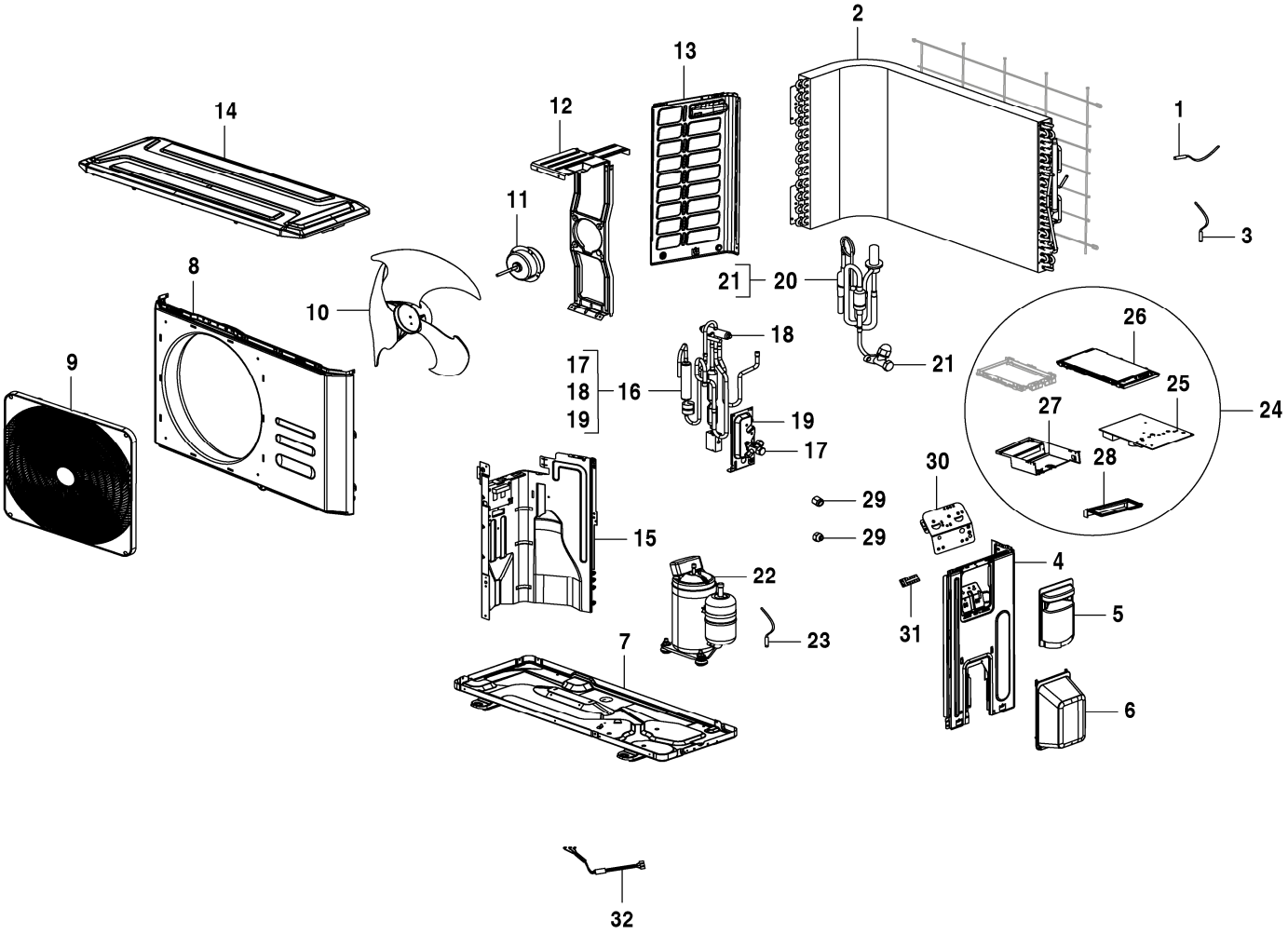

8738894967.aa.RO

RAC 5,3-2 OUE 8 733 500 851

Pos	Description	Ordering no.	RAC 5,3-2 OUE																Remarks
1	Room Temperature Sensor	7 739 838 131	■																
2	Condenser assembly	7 739 838 289	■																
3	Pipe Temperature Sensor	7 739 838 132	■																
4	Right clapboard assembly	7 739 832 369	■																
5	Big handle	7 739 832 370	■																
6	Water collector	7 739 832 371	■																
7	Chassis assembly	7 739 832 530	■																
8	Front panel assembly	8 733 500 252	■																
9	Air outlet grille	8 733 500 674	■																
10	Axial flow fan	7 739 832 531	■																
11	Brushless DC Motor	7 739 838 134	■																
12	Supporter subassembly of fan motor	8 733 500 256	■																
13	Left supporter	7 739 835 080	■																
14	Top cover assembly	7 739 832 379	■																
15	Partition board assembly	7 739 832 908	■																
16	4-way valve assembly	8 733 500 691	■																
17	Gas valve	7 739 832 536	■																
18	4-way valve	7 739 832 437	■																
19	Valve plate	7 739 832 384	■																
20	Liquid valve Assembly	8 733 500 692	■																
21	Liquid valve	7 739 832 386	■																
22	DC Inverter Rotary Compressor	8 733 500 693	■																
23	Discharge temperature sensor assembly	7 739 832 388	■																
24	Electronic control box subassembly	8 733 500 694	■																
25	Outdoor main control board subassembly	8 733 500 695	■																
26	Cover of electronic control box	7 739 832 681	■																
27	Electronic installing box subassembly	8 733 500 696	■																
28	Fixing board	8 733 500 687	■																
29	Pipe Nut TLM-A01 - 1/4’	7 739 832 339	■																
29	Pipe Nut TLM-C03 - 1/2’	7 739 832 398	■																
30	Terminal board	7 739 832 393	■																
31	Wire joint	7 739 832 394	■																
32	Connection cable assembly of compressor	7 739 834 977	■																

RAC 5,3-2 OUE 8 733 500 851

Spare parts list

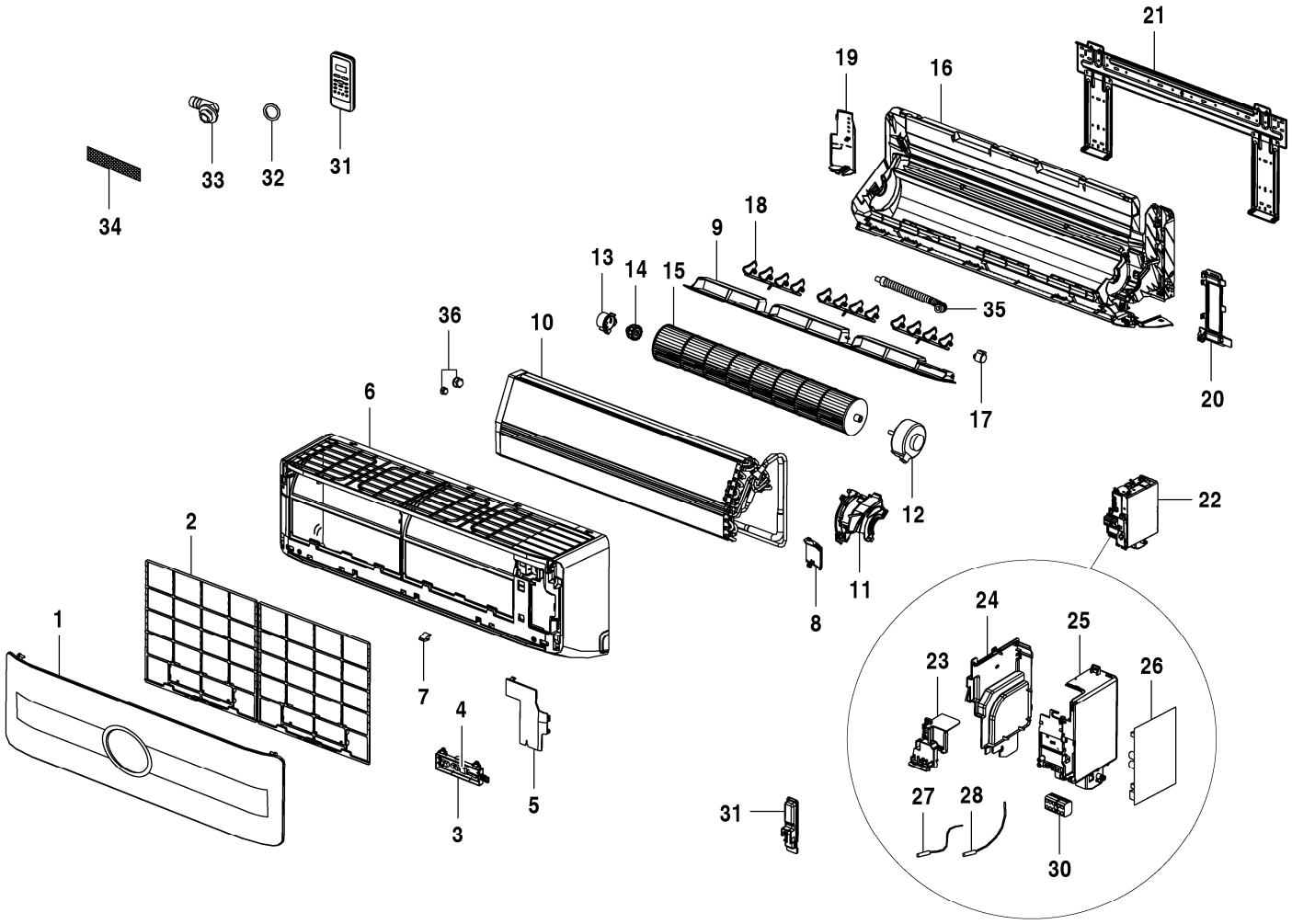

8738894142.ab.RO

RAC 5,3-3 IPW 7 739 838 034

Pos	Description	Ordering no.	RAC 5,3-3 IPW																Remarks
1	Panel assembly	8 750 500 704	■																
2	Air filter	7 739 832 511	■																
3	Display box subassembly	8 733 500 260	■																
4	Display board subassembly	8 733 500 242	■																
5	E-Parts Cover Plate	7 739 832 476	■																
6	Panel frame assembly	7 739 832 514	■																
7	Screw Cap	7 739 832 478	■																
8	Right cover of chassis	7 739 832 515	■																
9	Horizontal louver assembly	7 739 832 516	■																
10	Evaporator assembly	7 739 832 517	■																
11	Fan motor cover	7 739 832 518	■																
12	Asynchronous motor	7 739 832 401	■																
13	Bearing holder	7 739 832 344	■																
14	Bearing base	7 739 832 345	■																
15	Cross flow fan	7 739 832 519	■																
16	Chassis assembly	7 739 832 520	■																
17	Louver motor	7 739 832 521	■																
18	Vertical vane	7 739 832 522	■																
19	Left cover of chassis	7 739 832 523	■																
20	Pipe clamp board	7 739 832 524	■																
21	Installation plate	7 739 832 525	■																
22	Electronic control box assembly	7 739 835 018	■																
23	Upper Cover Board of PCB	7 739 832 490	■																
24	Left Side Plate of PCB	7 739 832 491	■																
25	Right Side Plate of E-Parts Box	7 739 832 492	■																
26	Indoor main control board assembly	7 739 835 056	■																
27	Room Temperature Sensor	7 739 832 494	■																
28	Pipe temperature sensor assembly	7 739 832 357	■																
30	Electrical Control Box Cover	7 739 832 495	■																
31	Infrared Room Controller	7 739 838 310	■																
32	Seal ring	7 739 832 361	■																
33	Drain hose	7 739 832 362	■																
34	Air freshening filter	7 739 832 363	■																
35	Drain hose	7 739 832 497	■																
36	Pipe Nut TLM-A01 - 1/4’	7 739 832 339	■																
36	Pipe Nut TLM-C03 - 1/2’	7 739 832 398	■																
	Wire joint	7 739 832 358	■																

RAC 5,3-3 IPW 7 739 838 034

Spare parts list

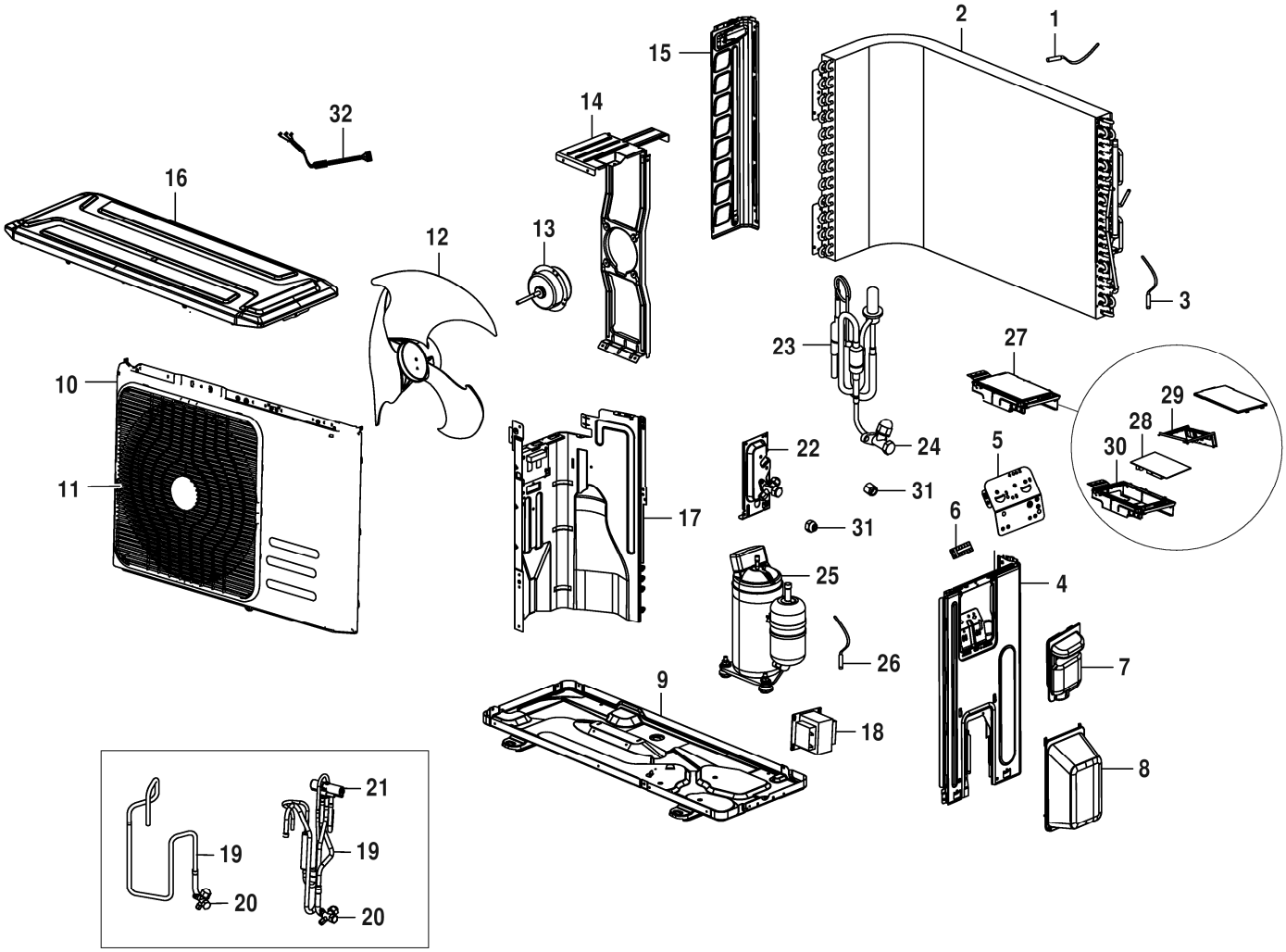

8738894143.aa.RO

RAC 5,3-3 OU 7 739 838 035

Pos	Description	Ordering no.	RAC 5,3-3 OU																Remarks
1	Room Temperature Sensor	7 739 835 127	■																
2	Condenser assembly	7 739 832 528	■																
3	Pipe temperature sensor assembly	7 739 832 456	■																
4	Right clapboard assembly	7 739 832 369	■																FD >= 2019
4	Right clapboard assembly	7 739 832 529	■																
5	Terminal board	7 739 832 393	■																
6	Wire joint	7 739 832 394	■																
6	Wire holder label	7 739 835 167	■																FD <2019
7	Big handle	7 739 832 370	■																
8	Water collector	7 739 832 371	■																
9	Chassis assembly	7 739 832 530	■																
10	Front panel	7 739 832 373	■																
10	Front panel assembly	8 733 500 252	■																FD >= 2019
11	Air outlet grille	7 739 832 374	■																
12	Axial flow fan	7 739 832 531	■																
13	Fan Motor	7 739 832 376	■																
13	Brushless DC Motor	7 739 838 134	■																FD >= 2019
14	Supporter assembly of fan motor	7 739 832 532	■																
14	Supporter subassembly of fan motor	8 733 500 256	■																FD >= 2019
15	Left supporter	7 739 835 080	■																
16	Top cover assembly	7 739 832 379	■																FD >= 2019
16	Top cover assembly	7 739 835 151	■																
17	Partition board assembly	7 739 832 533	■																
18	Reactor	7 739 832 534	■																
19	4-way valve assembly	7 739 832 535	■																
20	Gas valve	7 739 832 536	■																
21	4-way valve	7 739 832 437	■																
22	Valve plate	7 739 832 384	■																
23	High-Voltage valve Assembly	7 739 835 047	■																
24	Liquid valve	7 739 832 386	■																
25	DC Inverter Rotary Compressor	7 739 834 994	■																
26	Discharge temperature sensor assembly	7 739 832 388	■																
27	Electronic control box assembly	7 739 835 019	■																
28	Outdoor main control board assembly	7 739 835 094	■																
29	Support of electronic control box	7 739 832 440	■																
30	Electronic installing box	7 739 832 541	■																
31	Pipe Nut TLM-A01 - 1/4’	7 739 832 339	■																
31	Pipe Nut TLM-C03 - 1/2’	7 739 832 398	■																
32	Connection cable assembly of compressor	7 739 834 977	■																

RAC 5,3-3 OU 7 739 838 035

Spare parts list

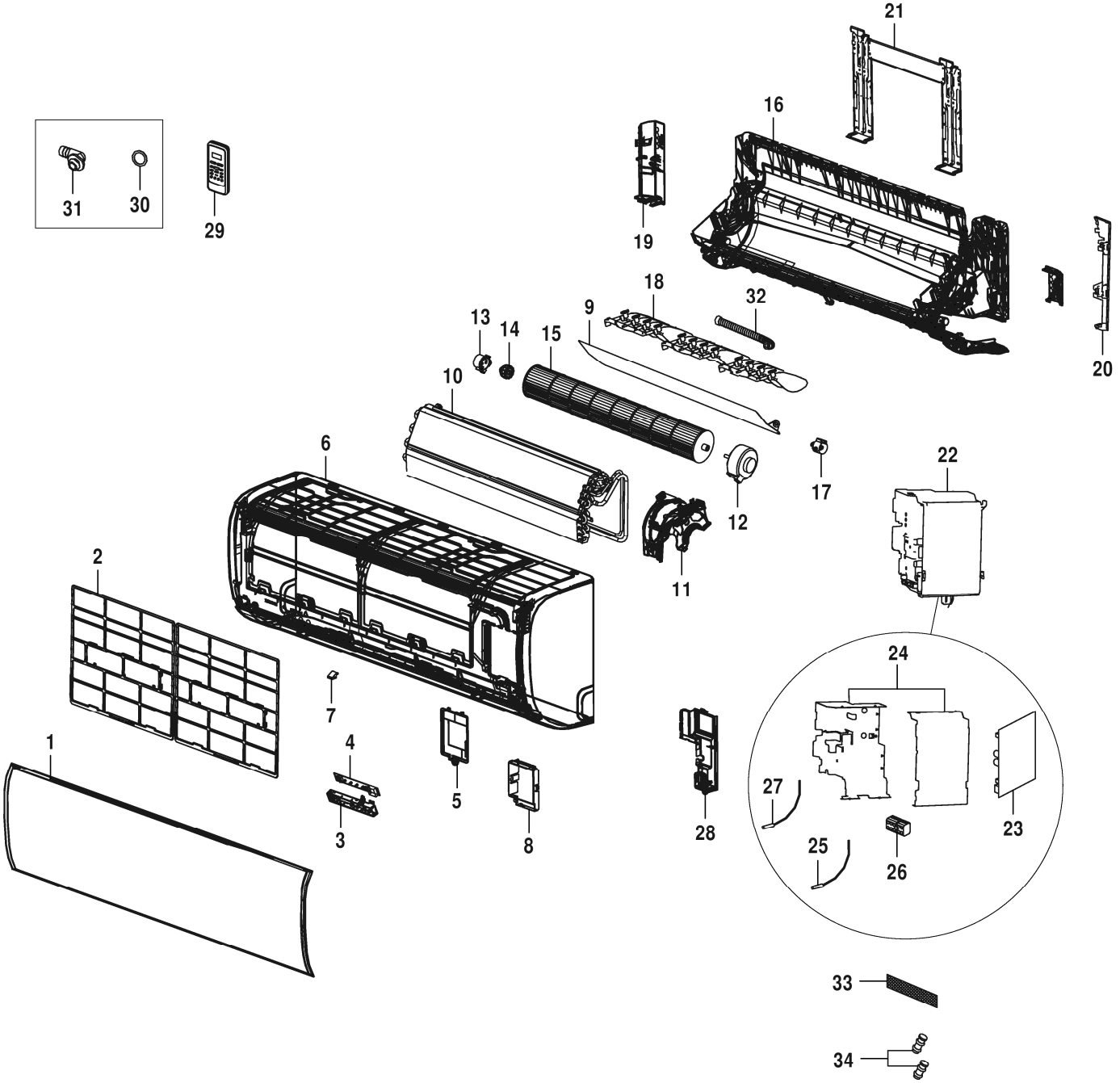

8738894118.aa.RO

RAC 7-2 IBW 7 733 700 109

Pos	Description	Ordering no.	RAC 7-2 IBW																Remarks
1	Panel assembly	8 750 500 706	■																
2	Air filter	7 739 834 954	■																
3	Display box assembly of Split Unit	7 739 834 997	■																
4	Display board assembly	7 739 834 995	■																
5	Cover of electrical equipment	7 739 834 983	■																
6	Panel frame assembly	7 739 835 109	■																
7	Screw cap	7 739 835 130	■																
8	Terminal cover assembly	7 739 835 146	■																
9	Horizontal louver assembly	7 739 835 050	■																
10	Evaporator assembly Gas valve assembly	7 739 835 038	■																
11	Fan motor cover	7 739 835 041	■																
12	Fan motor	7 739 832 422	■																
13	Bearing holder	7 739 832 344	■																
14	Bearing base	7 739 832 345	■																
15	Cross flow fan	7 739 832 423	■																
16	Chassis assembly	8 733 500 283	■																
17	Louver motor	7 739 832 552	■																
18	Vertical vane	7 739 835 158	■																
19	Left cover of chassis	7 739 835 079	■																
20	Pipe clamp board	7 739 835 116	■																
21	Installation plate	7 739 835 072	■																
22	Electronic control box subassembly	8 733 500 712	■																
23	Main control board subassembly	8 733 500 713	■																
24	Electronic control box subassembly	8 733 500 285	■																
25	Pipe temperature sensor assembly	7 739 832 357	■																
26	Wire joint	7 739 832 432	■																
27	Ambient temperature sensor assembly	7 739 832 408	■																
28	Cover of electronic control box	7 739 834 985	■																
29	Infrared Room Controller	7 733 700 120	■																
30	Seal ring	7 739 832 361	■																
31	Drain hose	7 739 832 362	■																
32	Drain hose	7 739 832 497	■																
33	Air freshening filter	7 739 832 363	■																
34	Pipe Nut TLM-B02 - 3/8’	7 739 832 338	■																
34	Pipe Nut TLM-D04 - 5/8’	7 739 832 418	■																

RAC 7-2 IBW 7 733 700 109

Spare parts list

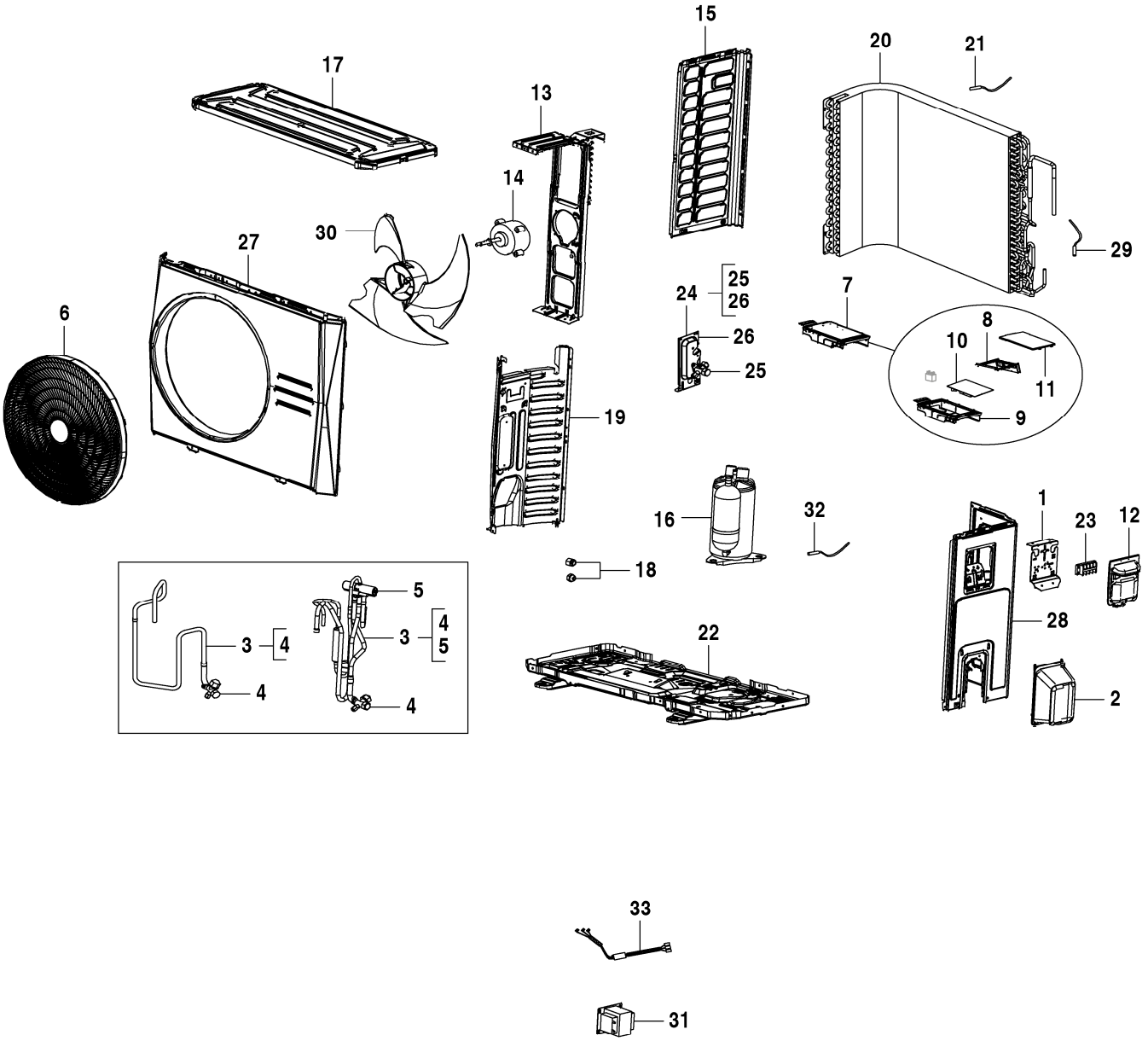

8738894968.aa.RO

RAC 7-2 OUE 8 733 500 852

Pos	Description	Ordering no.	RAC 7-2 OUE																Remarks
1	Terminal board	7 739 832 434	■																
2	Water collector	7 739 832 371	■																
3	4-way valve assembly	7 739 832 435	■																
4	Gas valve	7 739 832 436	■																
5	4-way valve	7 739 832 437	■																
6	Air outlet grille	8 733 500 697	■																
7	Electronic control box subassembly	8 733 500 698	■																
8	Support of electronic control box	8 733 500 699	■																
9	Cover of electronic control box	7 739 832 441	■																
10	Outdoor main control board subassembly	8 733 500 700	■																
11	Cover of electronic control box	7 739 832 441	■																
12	Big handle	7 739 832 370	■																
13	Supporter assembly of fan motor	7 739 832 444	■																
14	Brushless DC Motor	8 733 500 701	■																
15	Left side plate assembly	7 739 832 446	■																
16	Inverter Controlled Rotary Compressor	7 739 835 076	■																
17	Top cover assembly	7 739 835 150	■																
18	Pipe Nut TLM-B02 - 3/8’	7 739 832 338	■																
18	Pipe Nut TLM-D04 - 5/8’	7 739 832 418	■																
19	Partition board assembly	7 739 832 449	■																
20	Condenser assembly	7 739 832 450	■																
21	Room Temperature Sensor	7 739 835 127	■																
22	Chassis assembly	7 739 832 451	■																
23	Wire joint	7 739 832 394	■																
24	Liquid valve assembly	8 733 500 702	■																
25	Liquid valve	7 739 832 453	■																
26	Valve plate	7 739 832 384	■																
27	Front panel	7 739 832 454	■																
28	Right side plate	7 739 832 455	■																
29	Pipe temperature sensor assembly	7 739 832 456	■																
30	Axial flow fan	7 739 832 457	■																
31	Reactor	7 739 832 458	■																
32	Discharge temperature sensor assembly	7 739 832 388	■																
33	Connection cable assembly of compressor	7 739 834 978	■																

RAC 7-2 OUE 8 733 500 852

Spare parts list

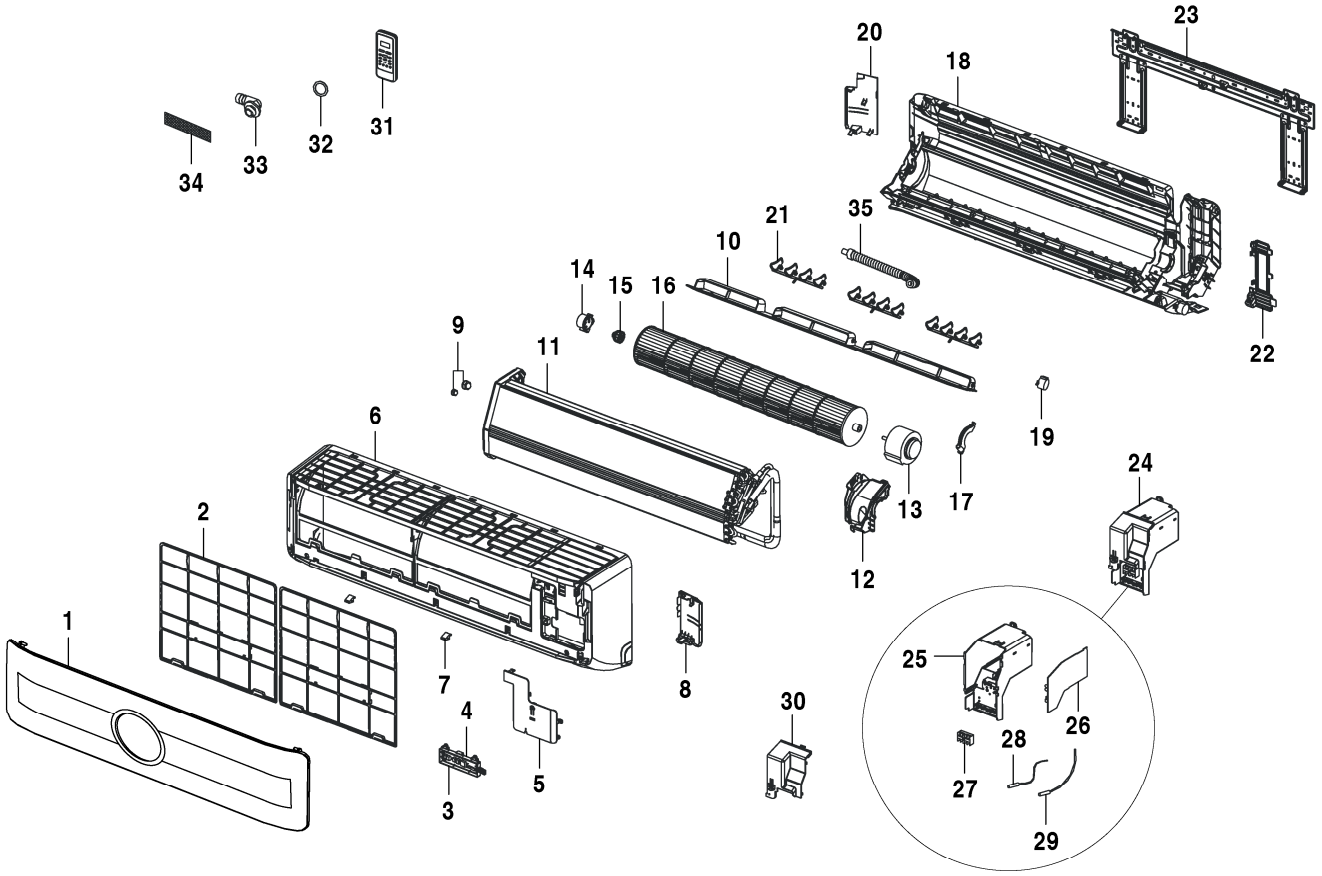

8738894119.ab.RO

RAC 7-3 IPW	7 739 838 036

Pos	Description	Ordering no.	RAC 7-3 IPW																Remarks
1	Panel assembly	8 750 500 708	■																
2	Air filter	7 739 832 543	■																
3	Indicator board assembly of Split Unit	7 739 835 051	■																
3	Display box subassembly	8 733 500 260	■																FD >= 2019
4	Display Panel Subassembly(Sticker)	7 739 834 999	■																
4	Display board subassembly	8 733 500 242	■																FD >= 2019
5	Cover of electrical equipment	7 739 832 544	■																
6	Panel frame assembly	7 739 832 545	■																
7	Screw Cap	7 739 832 478	■																
8	Right cover of chassis	7 739 832 546	■																
9	Pipe Nut TLM-B02 - 3/8’	7 739 832 338	■																
9	Pipe Nut TLM-D04 - 5/8’	7 739 832 418	■																
10	Horizontal louver assembly	7 739 832 547	■																
11	Evaporator assembly	7 739 832 548	■																
12	Fan motor cover	7 739 832 549	■																
13	Fan motor	7 739 832 422	■																
14	Bearing holder	7 739 832 344	■																
15	Bearing base	7 739 832 345	■																
16	Cross flow fan	7 739 832 550	■																
17	Fixing board of fan motor	7 739 832 421	■																FD <2019
18	Chassis assembly	7 739 832 551	■																
19	Louver motor	7 739 832 552	■																
20	Left cover of chassis	7 739 832 554	■																
21	Vertical vane	7 739 832 553	■																
22	Pipe clamp board	7 739 832 555	■																
23	Installation plate	7 739 832 525	■																
24	E-Parts Box assembly	7 739 835 026	■																
24	Electronic control box subassembly	8 733 500 264	■																FD >= 2019
25	Electronic installing box	7 739 832 558	■																
26	Indoor main control board assembly	7 739 835 053	■																
27	Wire joint	7 739 832 432	■																
28	Room Temperature Sensor	7 739 832 494	■																
29	Pipe temperature sensor assembly	7 739 832 431	■																
30	Cover of electronic control box	7 739 832 559	■																
31	Infrared Room Controller	7 739 838 310	■																
32	Seal ring	7 739 832 361	■																
33	Drain hose	7 739 832 362	■																
34	Air freshening filter	7 739 832 363	■																
35	Drain hose	7 739 832 497	■																

RAC 7-3 IPW 7 739 838 036

Spare parts list

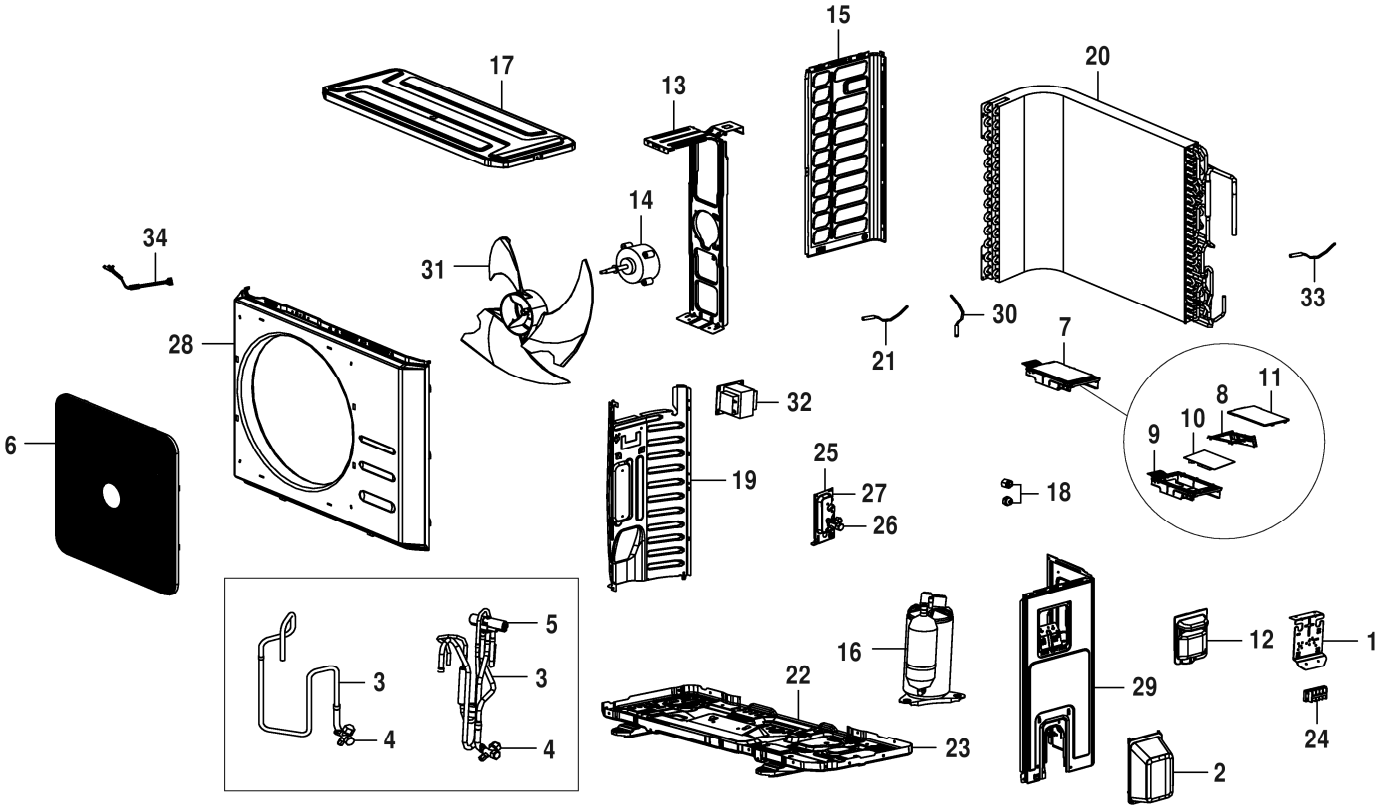

8738894115.aa.RO

RAC 7-3 OU 7 739 838 037

Pos	Description	Ordering no.	RAC 7-3 OU																Remarks
1	Terminal board	7 739 832 434	■																
2	Water collector	7 739 832 371	■																
3	4-way valve assembly	7 739 832 435	■																
4	Gas valve	7 739 832 436	■																
5	4-way valve	7 739 832 437	■																
6	Air outlet grille	7 739 832 438	■																
7	Electronic control box assembly	7 739 835 010	■																
8	Support of electronic control box	7 739 832 440	■																
9	Cover of electronic control box	7 739 832 441	■																
10	Outdoor main control board assembly	7 739 835 092	■																
11	Cover of electronic control box	7 739 832 443	■																
12	Big handle	7 739 832 370	■																
13	Supporter assembly of fan motor	7 739 832 444	■																
14	Brushless DC Motor	7 739 832 445	■																
15	Left side plate assembly	7 739 832 446	■																
16	Inverter Controlled Rotary Compressor	7 739 835 076	■																
17	Top cover assembly	7 739 835 150	■																
18	Pipe Nut TLM-B02 - 3/8’	7 739 832 338	■																
18	Pipe Nut TLM-D04 - 5/8’	7 739 832 418	■																
19	Partition board assembly	7 739 832 449	■																
20	Condenser assembly	7 739 832 450	■																
21	Room Temperature Sensor	7 739 835 127	■																
22	Chassis assembly	7 739 832 451	■																
23	Chassis	7 739 834 966	■																FD <2019
24	Wire joint	7 739 832 394	■																
25	High-Voltage valve Assembly	7 739 835 046	■																
26	Liquid valve	7 739 832 453	■																
27	Valve plate	7 739 832 384	■																
28	Front panel	7 739 832 454	■																
29	Right side plate	7 739 832 455	■																
30	Pipe temperature sensor assembly	7 739 832 456	■																
31	Axial flow fan	7 739 832 457	■																
32	Reactor	7 739 832 458	■																
33	Discharge temperature sensor assembly	7 739 832 388	■																
34	Connection cable assembly of compressor	7 739 834 978	■																

RAC 7-3 OU 7 739 838 037

Bosch Thermotechnik GmbH
Junkersstr. 20-24
D-73249 Wernau / Germany